ASSEMBLY INSTRUCTIONS

felton INDUSTRIES

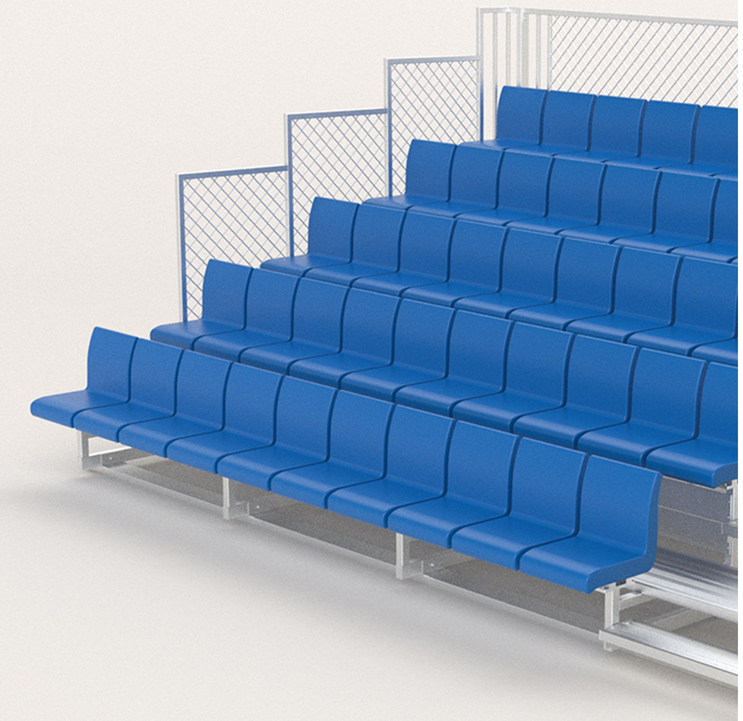

THANK YOU

for choosing Felton Industries.

ELITE PORTABLE GRANDSTAND 6MTR INDIVIDUAL SEATS

Code: FELEPG5T6IS

Felton Industries Pty Ltd | ABN: 17 130 687 240

felton.net.au sales@felton.net.au

1800 834 016

WARNING: This Assembly requires two or more people as lifting is involved. Please ensure bolts and nuts are only finger - tightened throughout assembly for flexibility in lining up components. Bolt and nuts should be securely tightened in place when instructed to do so. Please check all components are included before proceeding with the assembly.

NO.	NAME	QTY.
1	FELEPG5T6_BASE FRAME ASM -1	1
2	FELEPG5T6_BASE FRAME ASM - 2	1
3	FELEPG5T6_BASE FRAME ASM - 3	1
4	FELEPG5T6_BASE FRAME ASM - 4	1
5	FELEPG5T6_BASE FRAME ASM - 5	1
6	FELEPG5T9_FLOOR PLANK 3098.5 ASM	16
7	FELEPG5T9_MAIN UPRIGHT BAR_75x50	1
8	FELEPG5T9_MAIN UPRIGHT BAR_76x51	2
9	FELEPG5T9_AL SHS 25x25xT3xL3386	4
10	FELEPG5T9_BACK RAILING ASMM	2
11	FELEPG5T6_LEFT SIDE RAILING ASM	1
12	FELEPG5T6_RIGHT SIDE RAILING ASM	1
13	FELEPG5T9_STAIR PLANK 1432 ASM	4
14	AL SEAT SUPPORT WELDMENT UPPER DECK -A011	2
15	AL SEAT SUPPORT WELDMENT -A011 LOWER	4
16	FELEPG5T9_AL SKIRTING 150x4xL3000	10
17	FELEPG5T9_AL SKIRTING 150x4xL1510	6
18	L-BRACKET WELDMENT	2
19	AC-PS-0046	53
20	AS-Screw-ST4.5x25	84
21	M6x16mm Button Head Hex Screw	106
22	M6x20mm Button Head Hex Screw	106
23	AS-NZS 2465 Bolt -0.25 x1	160
24	AS-NZS NYLON Nut -0.25	160
25	Cup Head Bolt -0.375 x 1.5	42
26	AS-NZS NYLON Nut -0.375	62
27	AS-FLAT WASHER -0.375	62
28	AS 1112 Cup Head Bolt -0.375 x 3	20
29	AS-NZS 2465 Bolt -0.5 x 6.5	2
30	AS-NZS 2465 Bolt -0.5 x 5.5	4
31	AS-NZS 2465 Bolt -0.5 x 4.5	3
32	AS-NZS 2465 Bolt -0.5 x 3.5	26
33	AS-FLAT WASHER -0.5	70
34	AS-NZS NYLON Nut -0.5	35

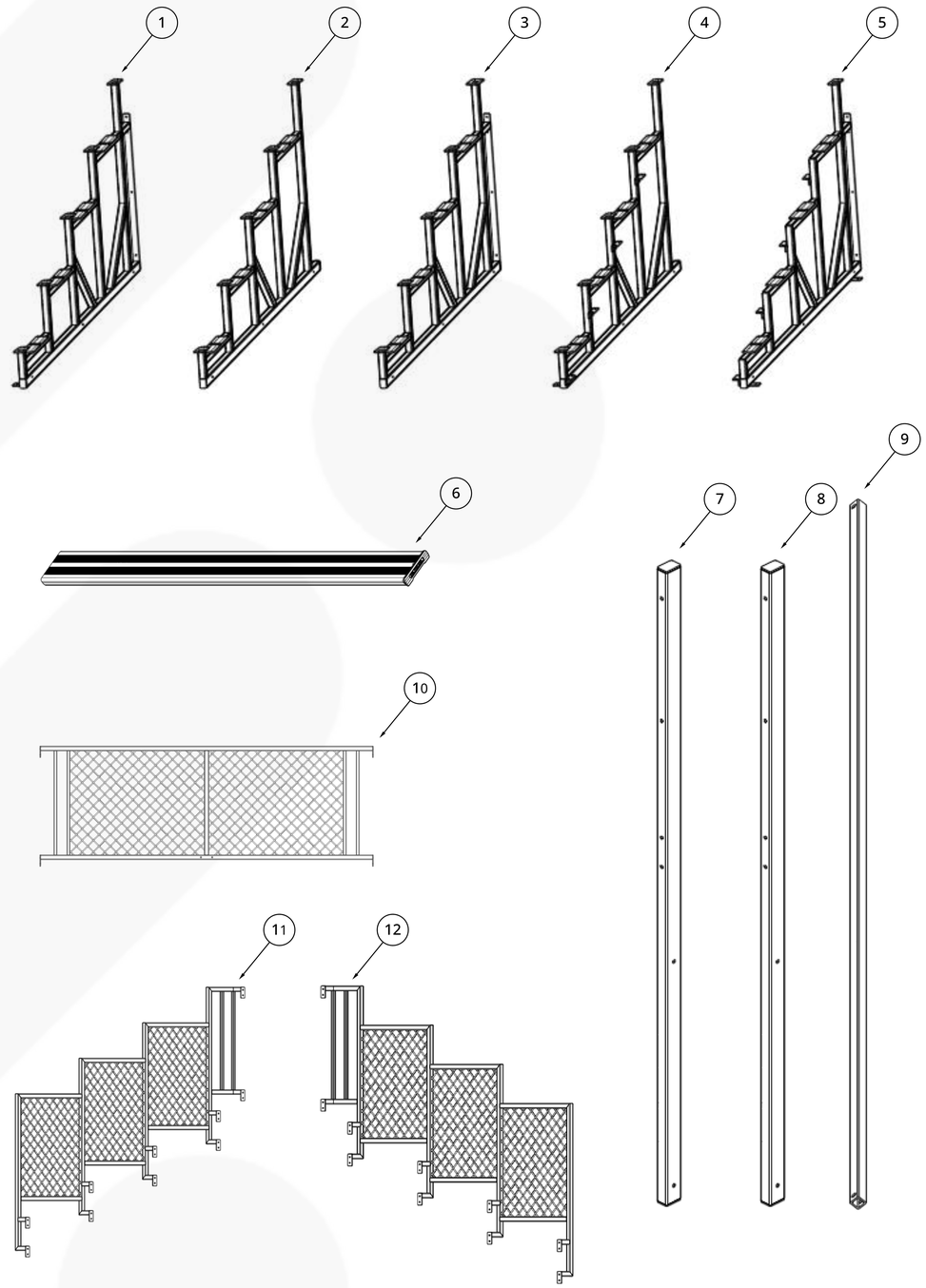

WARNING: This Assembly requires two or more people as lifting is involved. Please ensure bolts and nuts are only finger - tightened throughout assembly for flexibility in lining up components. Bolt and nuts should be securely tightened in place when instructed to do so. Please check all components are included before proceeding with the assembly.

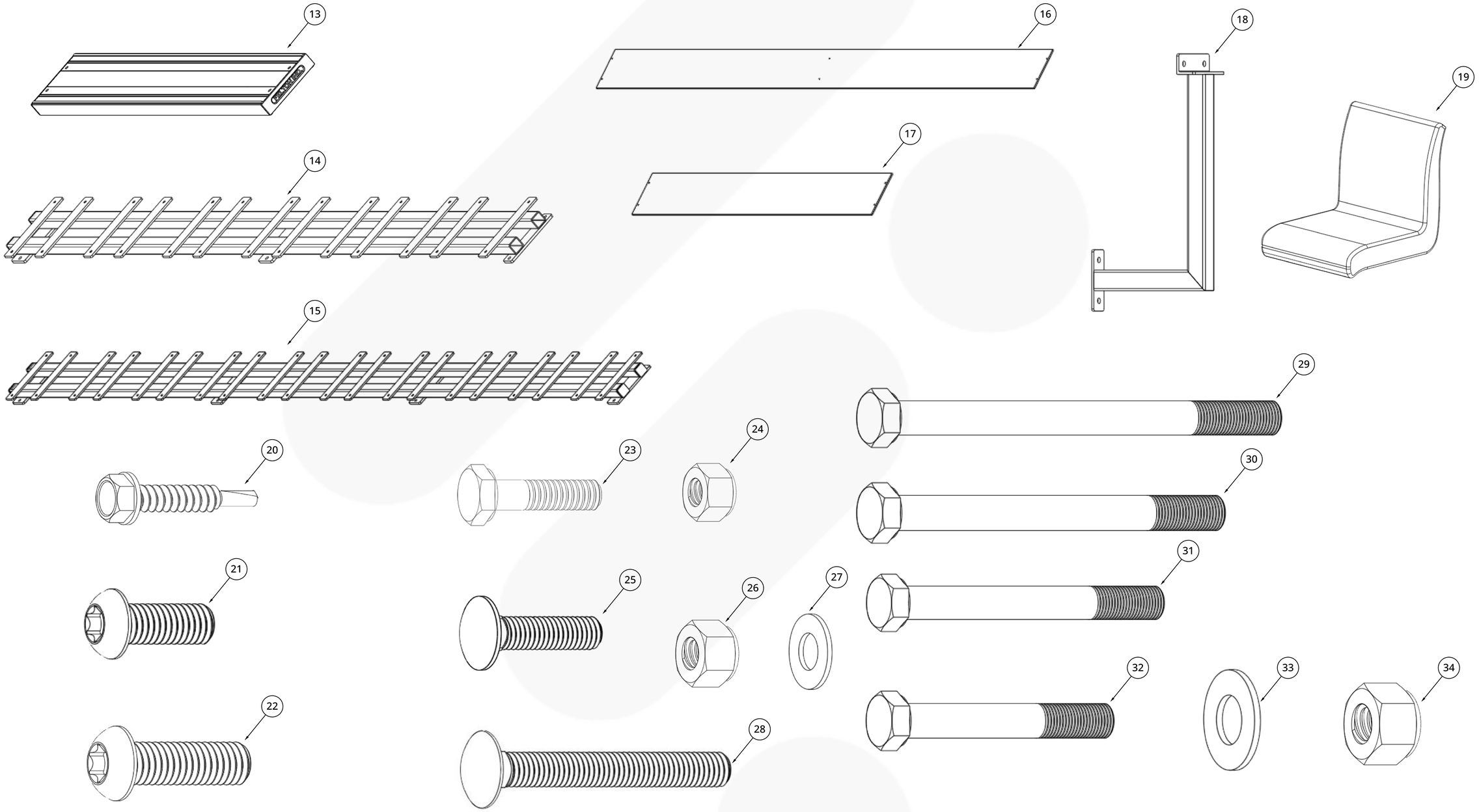

WARNING: This Assembly requires two or more people as lifting is involved. Please ensure bolts and nuts are only finger - tightened throughout assembly for flexibility in lining up components. Bolt and nuts should be securely tightened in place when instructed to do so. Please check all components are included before proceeding with the assembly.

1.

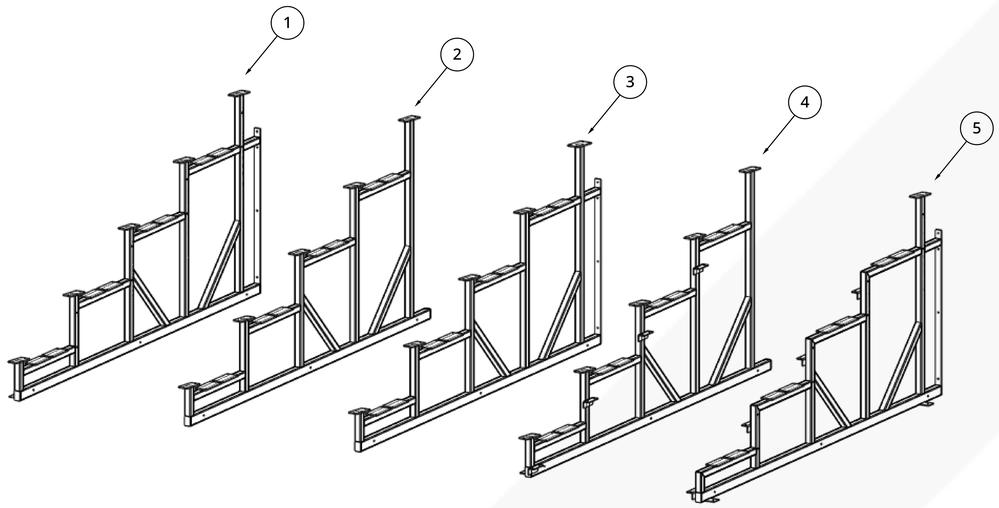

Position 5 base frames in a row, numbered 1 to 5, from left to right.

2.

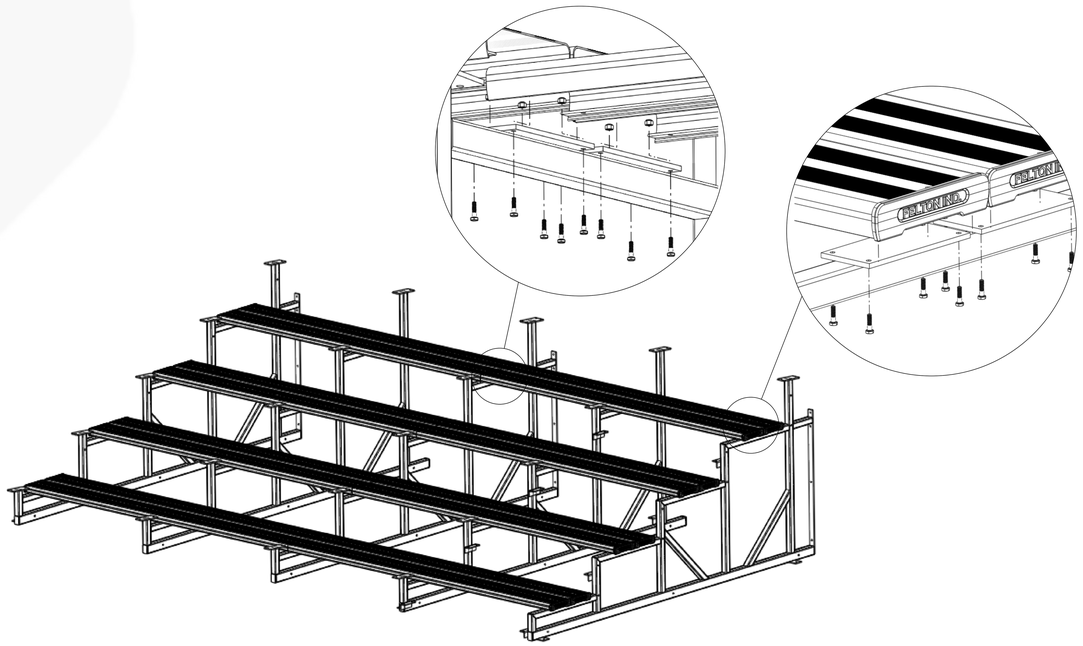

Attach sixteen floor planks(**6**) onto five base frames by using bolts(**23**) and nuts(**24**) as illustrated. Note that all planks should be attached from top to bottom.

3.

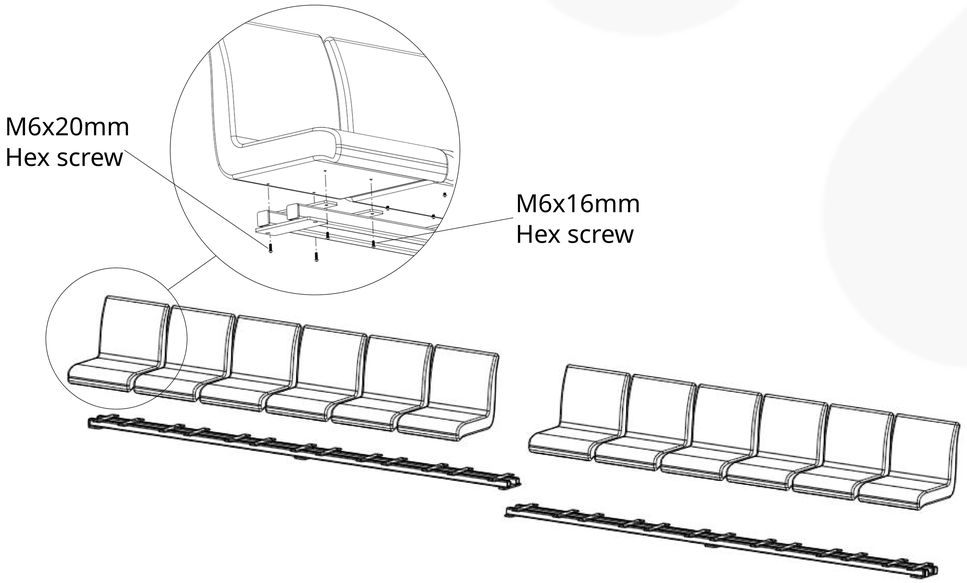

Pre-assemble the upper seats (**19**) onto the upper support weldments (**14**). Ensure the two support weldments face each other as shown in the illustration, with plastic caps fitted on both ends. Install the seats starting from one end toward the center, leaving one plate unoccupied. Secure the seats using M6 Allen screws. **IMPORTANT**: Use M6x16mm screws (**21**) at the front of the seat and M6x20mm screws (**22**) at the rear.

4.

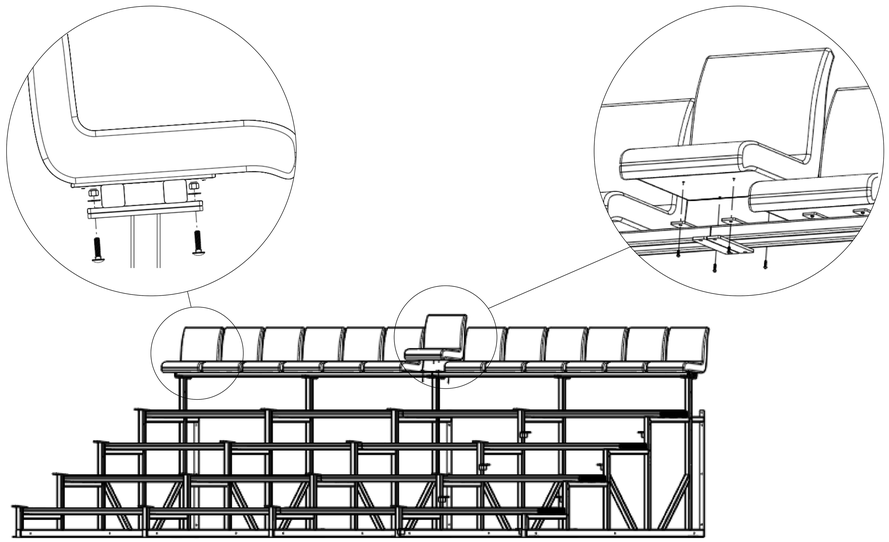

Attach the pre-assembled upper seats to the base frames as illustrated using cup head bolts(**25**), nuts(**26**), & washers(**27**). Install the middle seat using M6 Allen screws. **IMPORTANT**: Use M6x16mm screws (**21**) at the front of the seat and M6x20mm screws (**22**) at the rear.

WARNING: This Assembly requires two or more people as lifting is involved. Please ensure bolts and nuts are only finger - tightened throughout assembly for flexibility in lining up components. Bolt and nuts should be securely tightened in place when instructed to do so. Please check all components are included before proceeding with the assembly.

5.

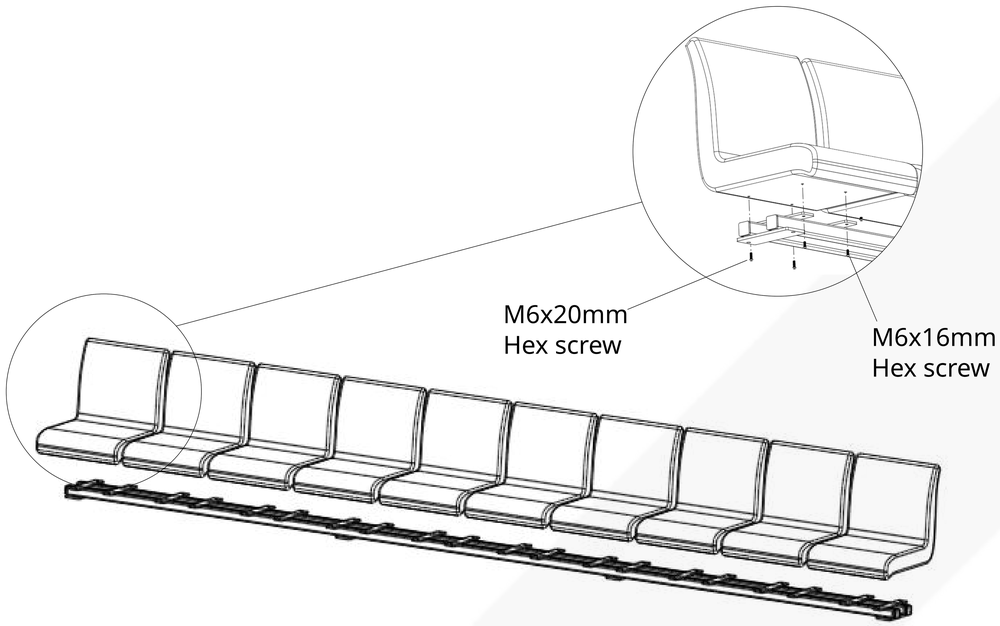

Pre-assemble the lower seats (**19**) onto the lower support weldments (**15**). Secure the seats using M6 Allen screws. **IMPORTANT**: Use M6x16mm screws (**21**) at the front of the seat and M6x20mm screws (**22**) at the rear. Do qty. 4 of these pre-assembled seats.

6.

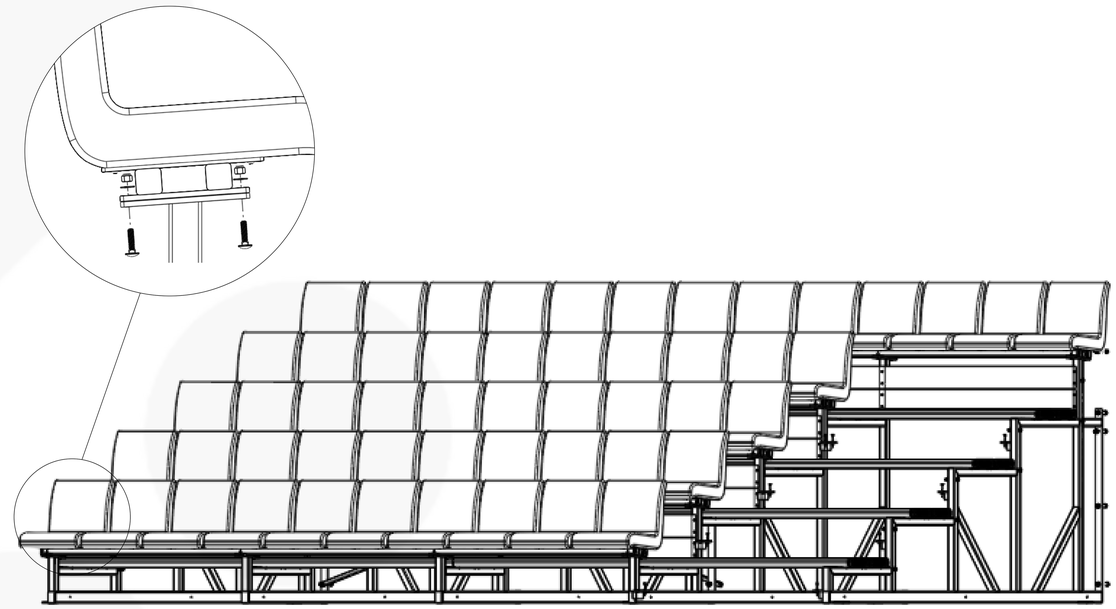

Attach the pre-assembled lower seats to the base frames as illustrated using cup head bolts(**25**), nuts(**26**), & washers(**27**).

7.

NOTE: Lower seats hidden to show the skirts

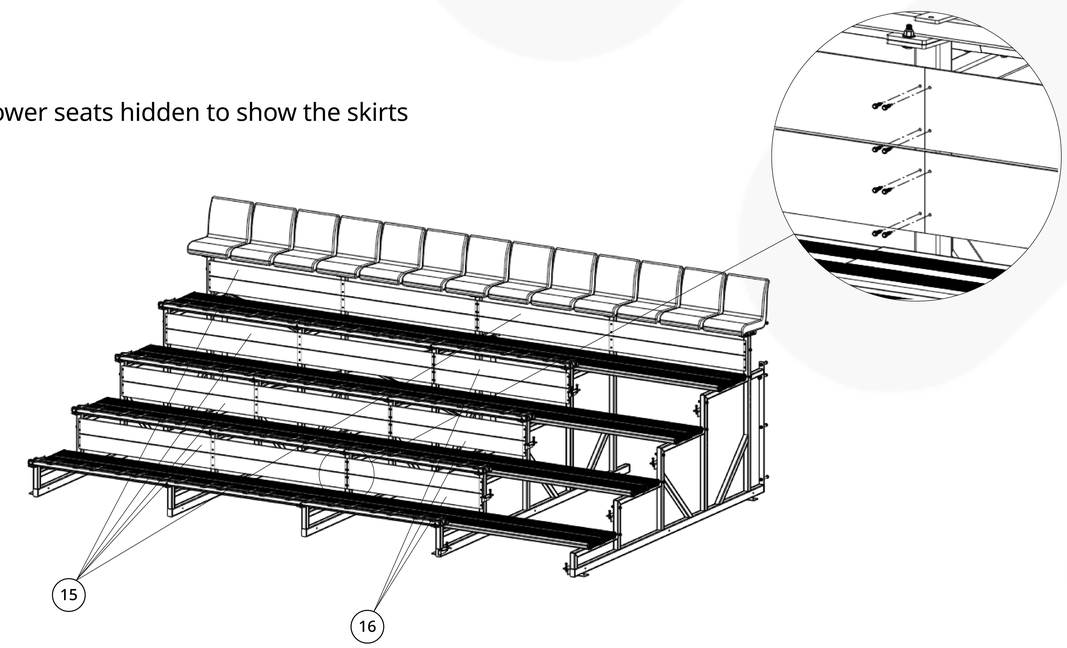

Fasten ten long skirting boards(**16**) and six short skirting boards(**17**) firmly onto vertical tubes on all base frames by using self tapping screws (**20**) . Ensure that boards & are fastened from joining points as illustrated towards outer ends to avoid length shortage.

8.

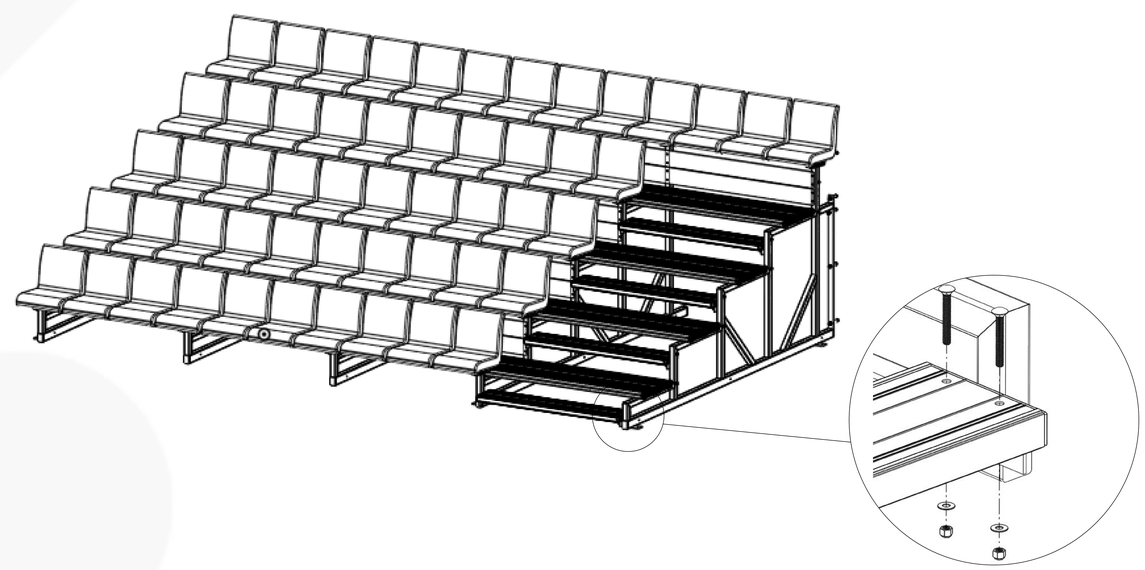

Attach four stair planks(**13**) onto the base frames by using cup head bolts(**28**), nuts(**26**) & washers(**27**) as illustrated.

WARNING: This Assembly requires two or more people as lifting is involved. Please ensure bolts and nuts are only finger - tightened throughout assembly for flexibility in lining up components. Bolt and nuts should be securely tightened in place when instructed to do so. Please check all components are included before proceeding with the assembly.

9.

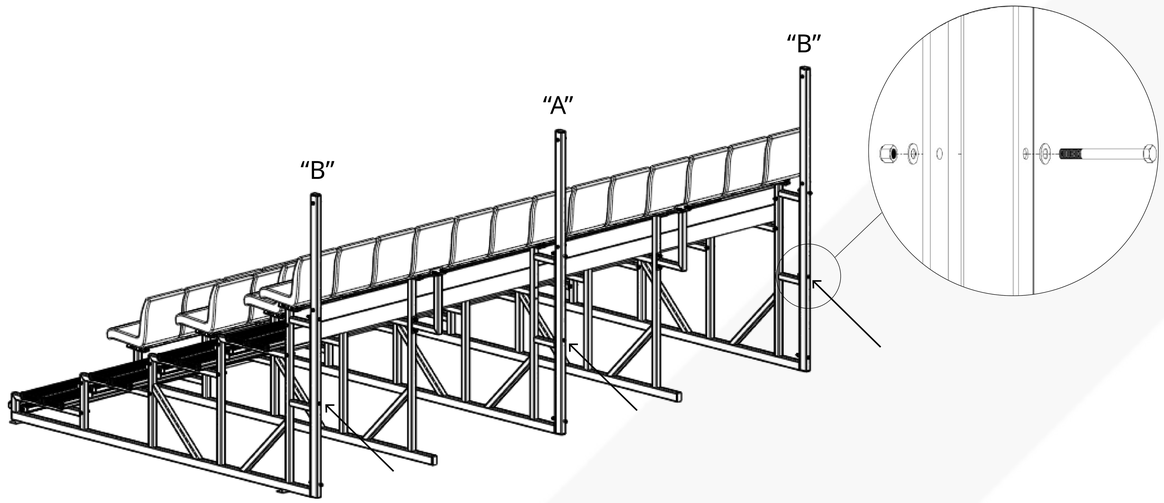

Attach three upright bars to the back of the base frames.
Note: There are two nearly identical variants of the upright bar. The bar (**7**) labeled "A" is installed in the middle, while the two bars (**8**) labeled "B" are installed on each side.Secure them at the locations indicated by the arrows using bolts (**31**), washers (**33**), and nuts (**34**), as illustrated.Ensure all bars are installed in the correct positions.

10.

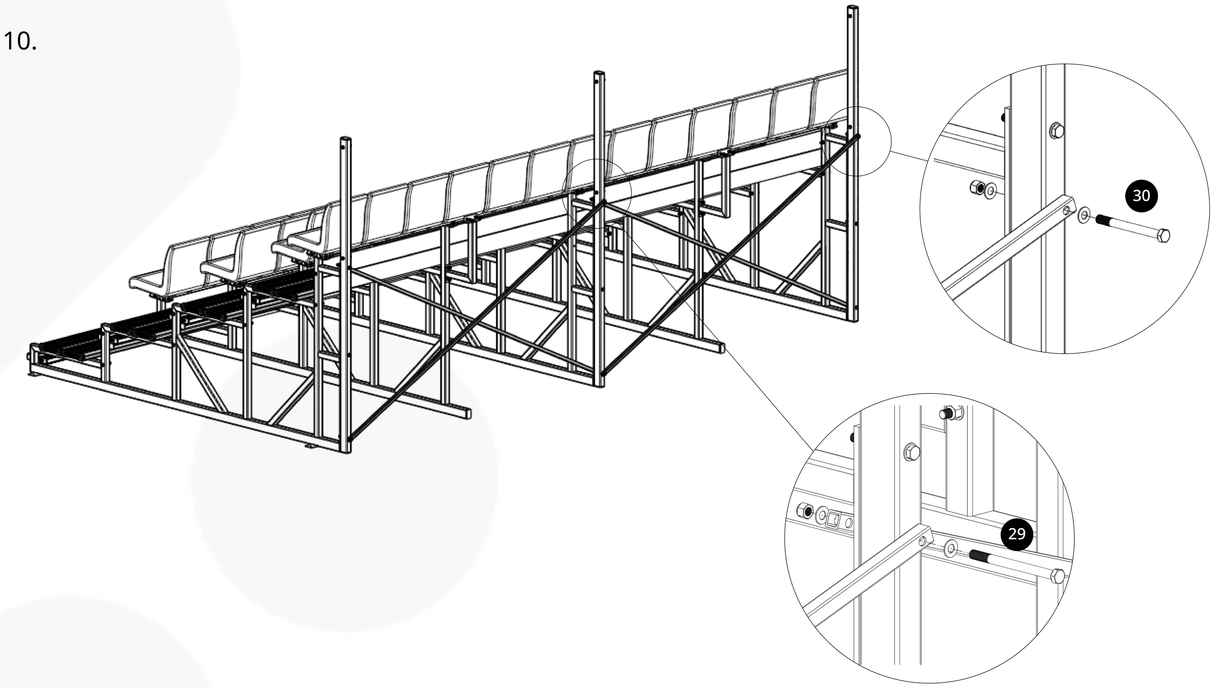

Attach the diagonal braces (**9**) at the back of the base frames and upright bars to support the assembly structure. Secure it by using bolts(**29 & 30**) , nuts (**34**), and washers(**33**) as illustrated.

11.

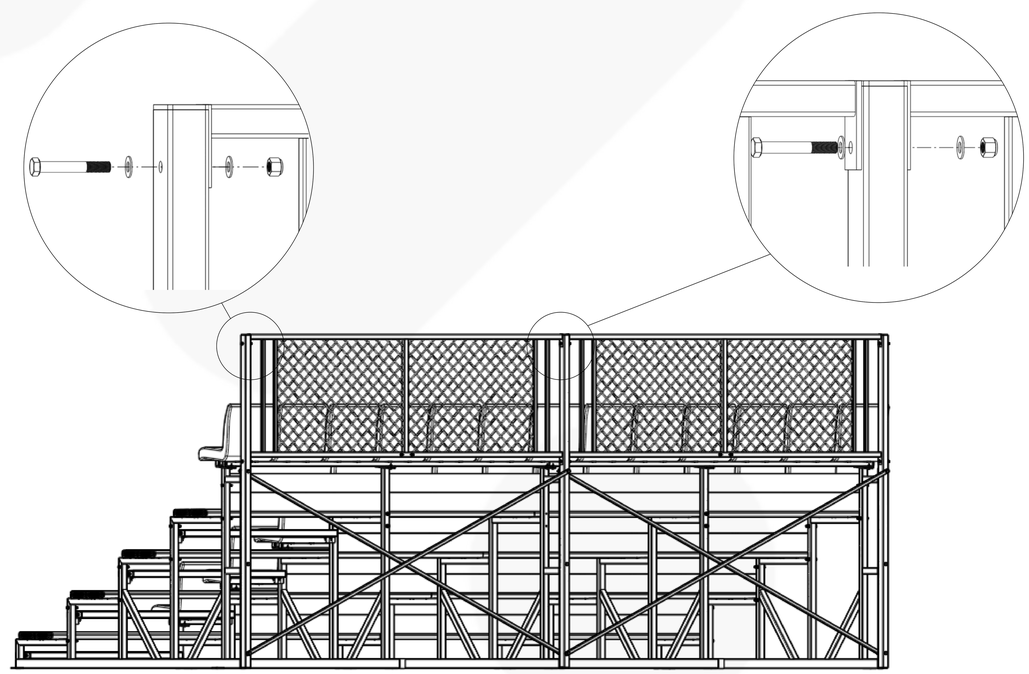

Attach the back railing to the upright bars by using bolts(**32**) , washers(**33**) and nuts(**34**) as illustrated.

WARNING: This Assembly requires two or more people as lifting is involved. Please ensure bolts and nuts are only finger - tightened throughout assembly for flexibility in lining up components. Bolt and nuts should be securely tightened in place when instructed to do so. Please check all components are included before proceeding with the assembly.

12.

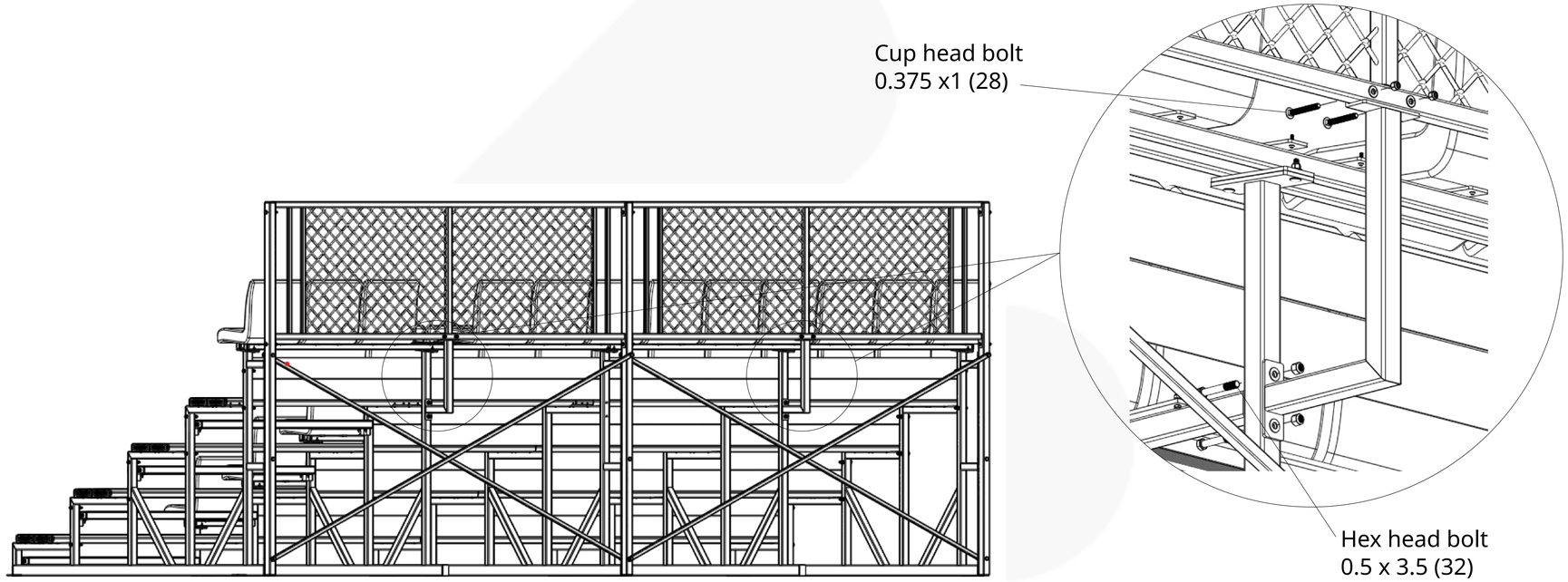

Attach the L-Bracket (**18**) to support back railing. Secure it using cup head bolts(**28 & 32**) , washers(**27 & 33**) and nuts(**26 & 34**) as illustrated.

13.

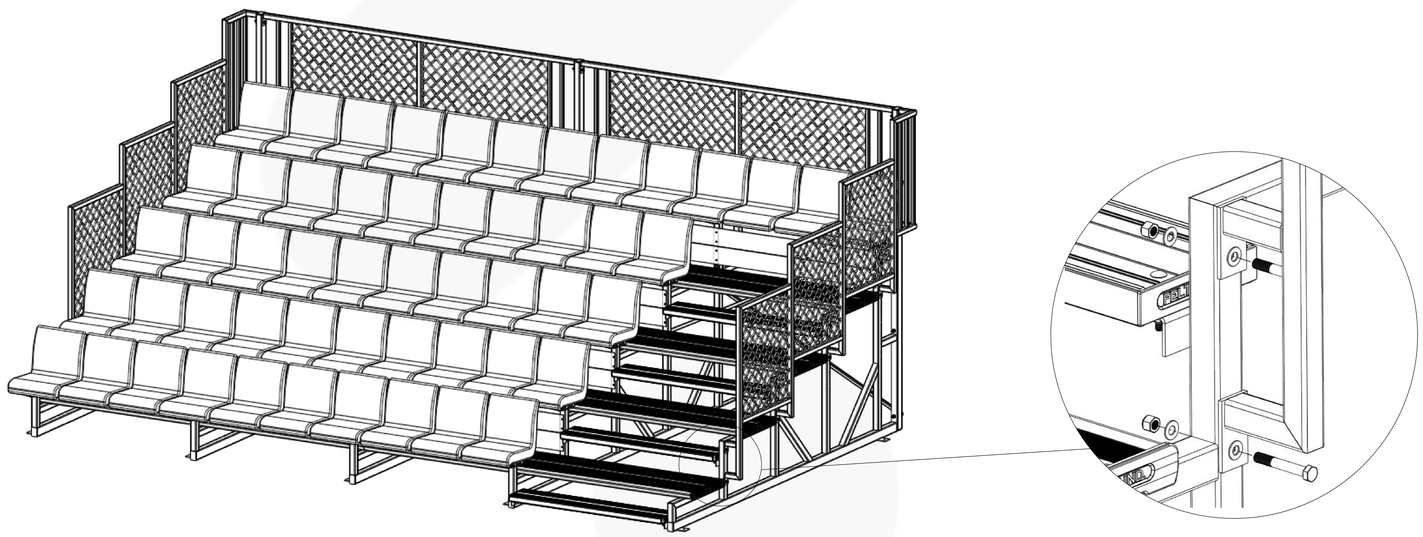

Attach the left and right side railings to the base frames using Bolts (**32**), Washers (**33**), and Nuts (**34**) as shown. Once in place, fully tighten all fasteners using the appropriate tools. Finally, anchor the base frames firmly to the ground using M12 Dynabolts. The grandstand is now ready for use.