ASSEMBLY INSTRUCTIONS

felton INDUSTRIES

WARNING: This Assembly requires two or more people as lifting is involved. Please ensure bolts and nuts are only finger - tightened throughout assembly for flexibility in lining up components. Bolt and nuts should be securely tightened in place when instructed to do so. Please check all components are included before proceeding with the assembly.

NO.	NAME	QTY.
1	Side Leg Assembly	2
2	Middle Leg Assembly	1
3	Top Runner Weldment	7
4	Felass33 Corrugated Custom Orb .42 L6100	8
5	AS-NZS 2465 Bolt - 0.5 x 5.5	16
6	AS-NZS 2465 Bolt - 0.5 x 3	21
7	AS-Flat Washer - 0.5	74
8	AS-NZS Nylon Nut - 0.5	37
9	AS-Screw-ST5.5x39	182

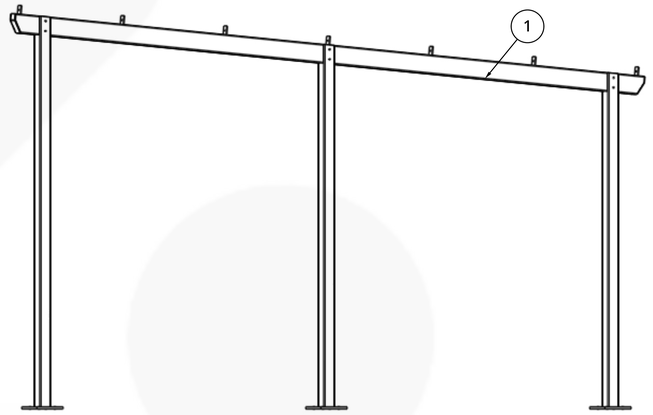

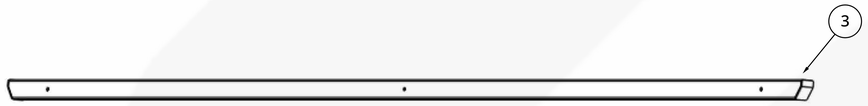

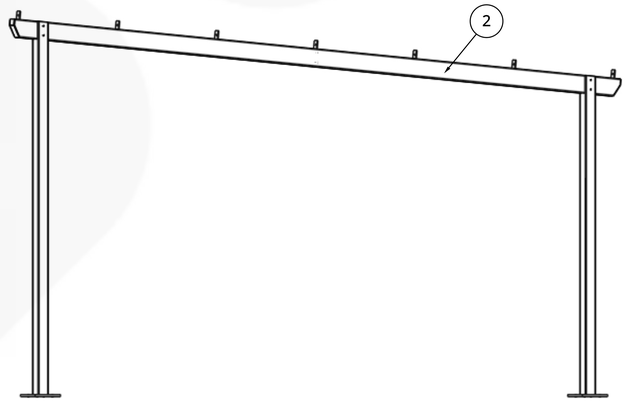

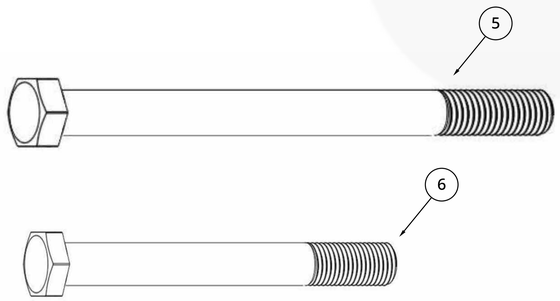

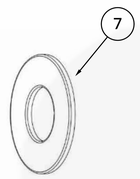

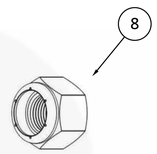

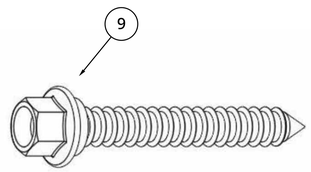

THANK YOU

for choosing Felton Industries.

SKILLION SHELTER 6X6 MTR

Code: SL-SS-0123

Felton Industries Pty Ltd | ABN: 17 130 687 240

felton.net.au sales@felton.net.au

1800 834 016

WARNING: This Assembly requires two or more people as lifting is involved. Please ensure bolts and nuts are only finger - tightened throughout assembly for flexibility in lining up components. Bolt and nuts should be securely tightened in place when instructed to do so. Please check all components are included before proceeding with the assembly.

1.

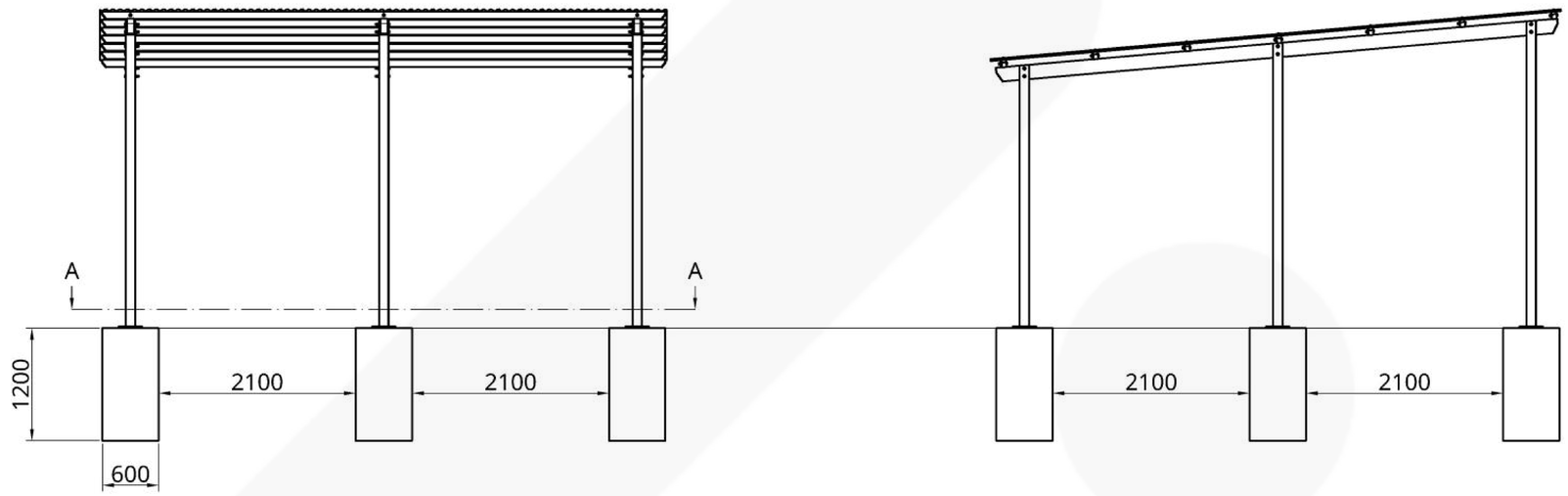

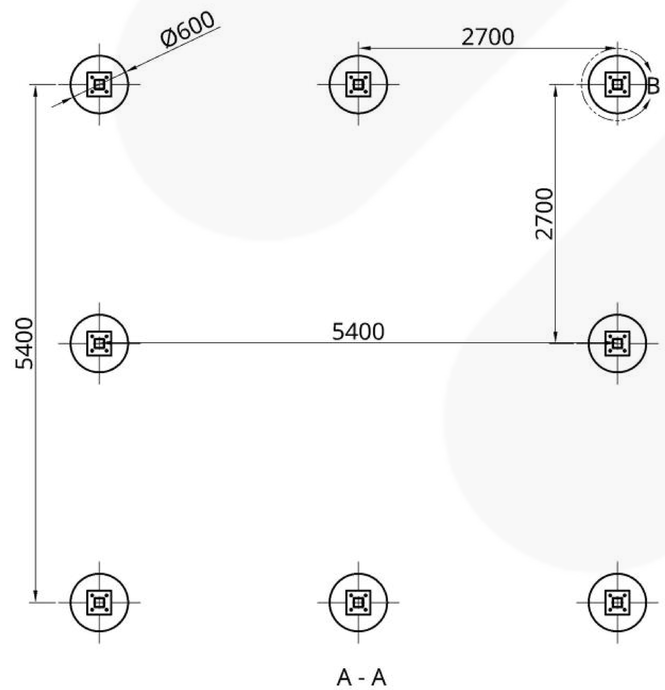

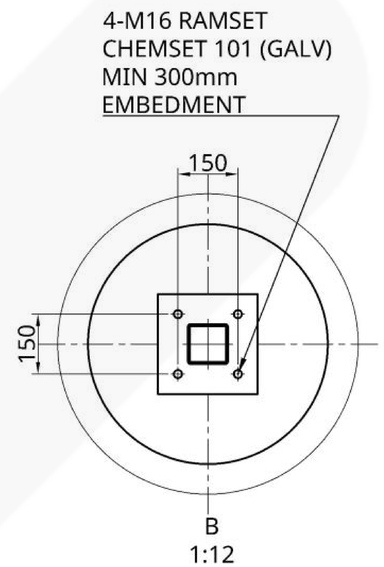

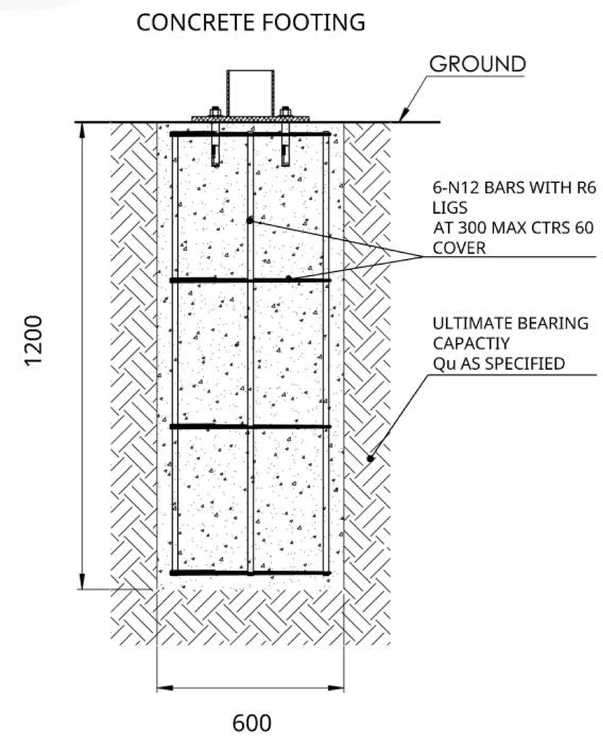

Follow the concrete footing details as specified in the drawings above. Install eightconcrete footings spaced **2100mm apart (footing to footing)** or **2700mm apart (leg to leg) as shown in the drawings**, at the designated locations where the shelter legs will be installed. The image is provided for reference only and illustrates the complete assembly, and specified footing dimensions and fixings.

WARNING: This Assembly requires two or more people as lifting is involved. Please ensure bolts and nuts are only finger - tightened throughout assembly for flexibility in lining up components. Bolt and nuts should be securely tightened in place when instructed to do so. Please check all components are included before proceeding with the assembly.

2.

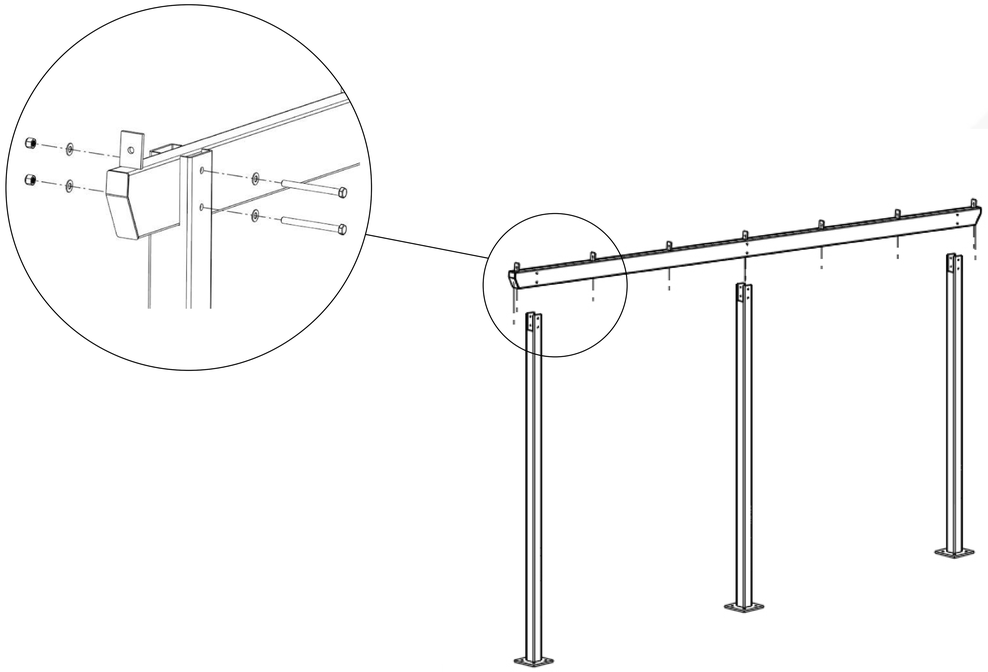

Pre-assemble the support (**1**) by inserting the rafter bracket into the front, middle and rear vertical tubes, as illustrated. Secure with bolts(**5**), nuts(**8**) and washers(**7**). Repeat the same procedure to create X2 side supports.

3.

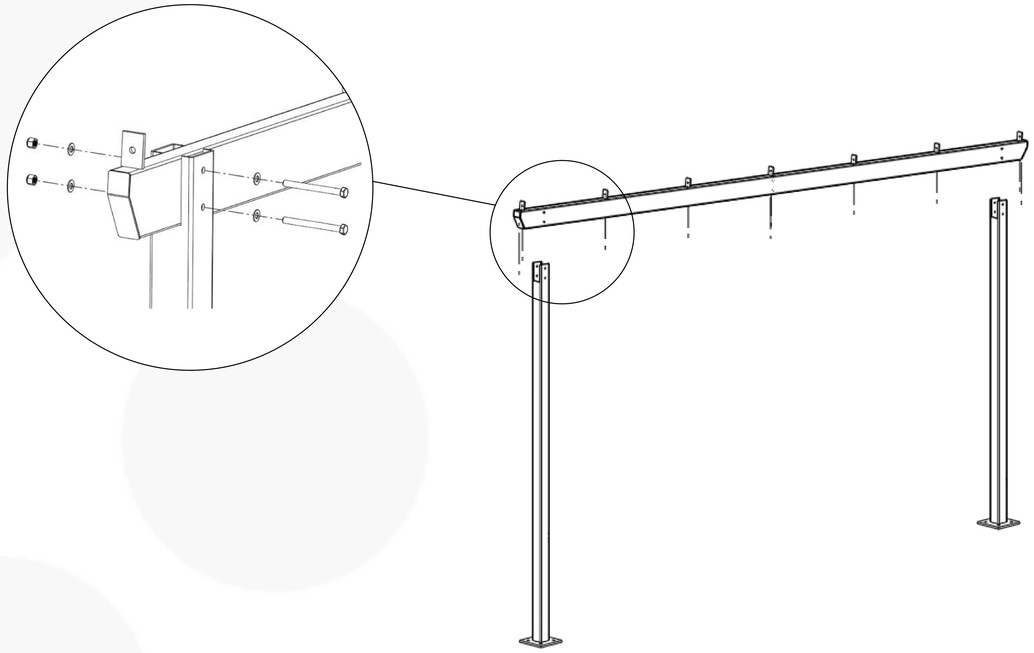

Pre-assemble the middle support (**2**) by inserting the middle rafter bracket into the front and rear vertical tubes, as illustrated. Secure with bolts(**13**), nuts(**16**) and washers(**15**).

4.

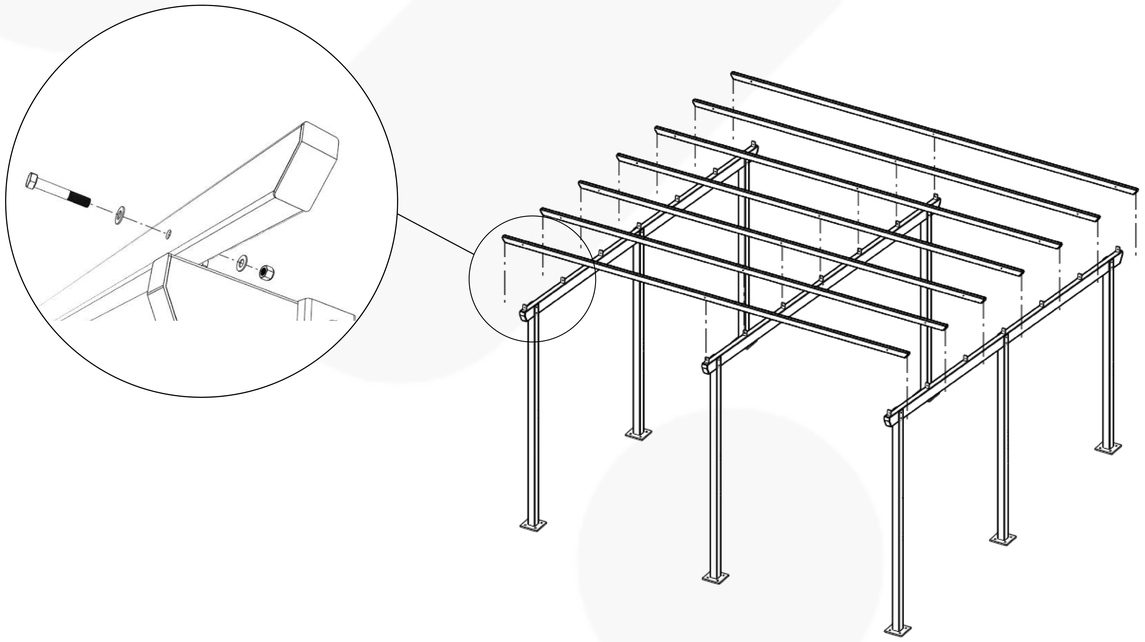

Align the legs as shown, then attach the top runners(**3**) using bolts (**6**), nuts (**8**), and washers (**7**) as illustrated.

WARNING: This Assembly requires two or more people as lifting is involved. Please ensure bolts and nuts are only finger - tightened throughout assembly for flexibility in lining up components. Bolt and nuts should be securely tightened in place when instructed to do so. Please check all components are included before proceeding with the assembly.

5.

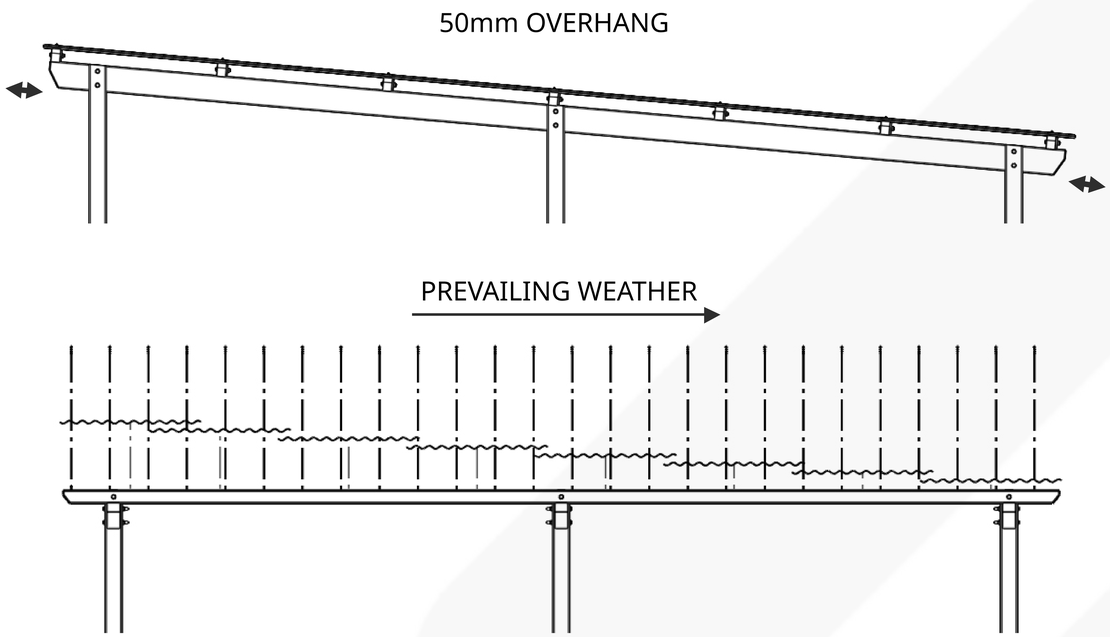

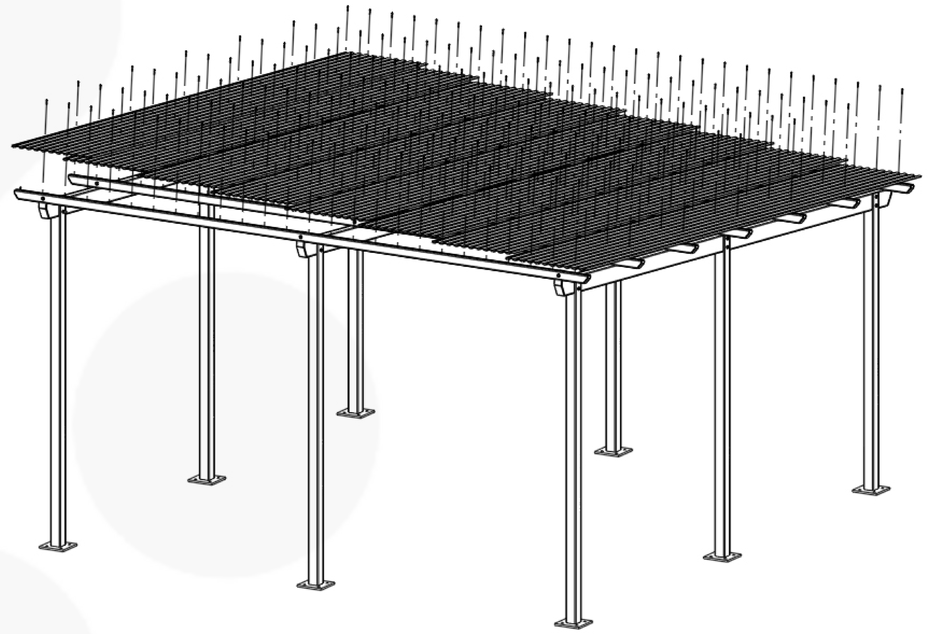

Fasten corrugated roofs (**4**) to the assembly in step 4 by screws (**9**) . Ensure that the roofs' overlapping position and screws' position conform with the illustration above. Note that the valleys of sheets should be turned-down at lower ends and turned-up at upper ends as recommendation from manufacturer. Ensure the roof edge is 50mm overhang on each end.

6.

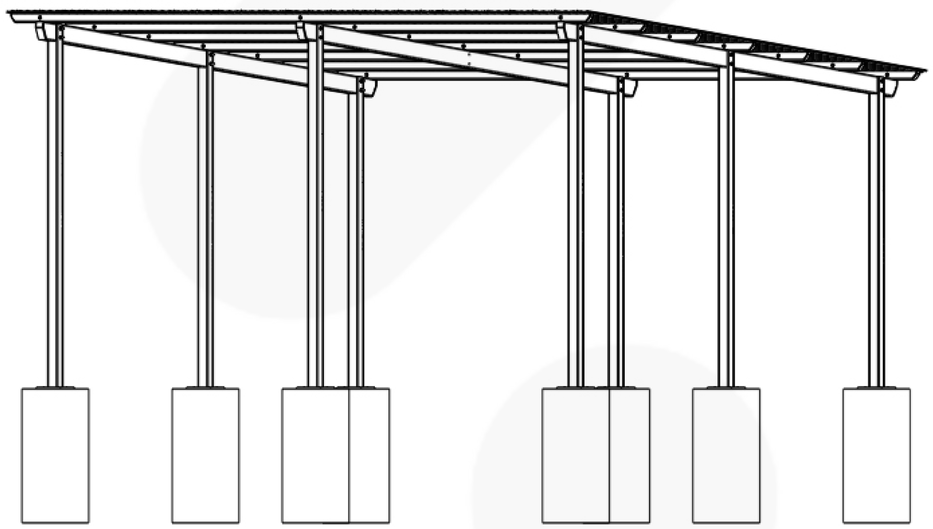

Tighten all hexagonal head bolts with spanners and appropriate tools. Use M12 dynabolts to attach the whole assembly firmly to the ground. Follow the concrete footing details as specified on the first page.