ASSEMBLY INSTRUCTIONS

felton INDUSTRIES

THANK YOU

for choosing Felton Industries.

Avoca Bench
Concrete Mount
Codes: BS-AB-0112 | BS-AB-0113 | BS-AB-0114 | BS-AW-0118 | BS-AW-0119 | BS-AW-0120

Felton Industries Pty Ltd | ABN: 17 130 687 240

felton.net.au sales@felton.net.au
1800 834 016

WARNING: This Assembly requires two or more people as lifting is involved. Please ensure bolts and nuts are only finger - tightened throughout assembly for flexibility in lining up components. Bolt and nuts should be securely tightened in place when instructed to do so. Please check all components are included before proceeding with the assembly.

NO.	NAME	QTY.
1	Avoca Bench Middle Plate Weldment	1
2	Avoca Bench Plate Weldment	2
3	M6x20mm-Button Head Torx Screw	15
4	Square Alu Batten L1812 (1)	3
5	Round Alu Batten L1812(1)	2

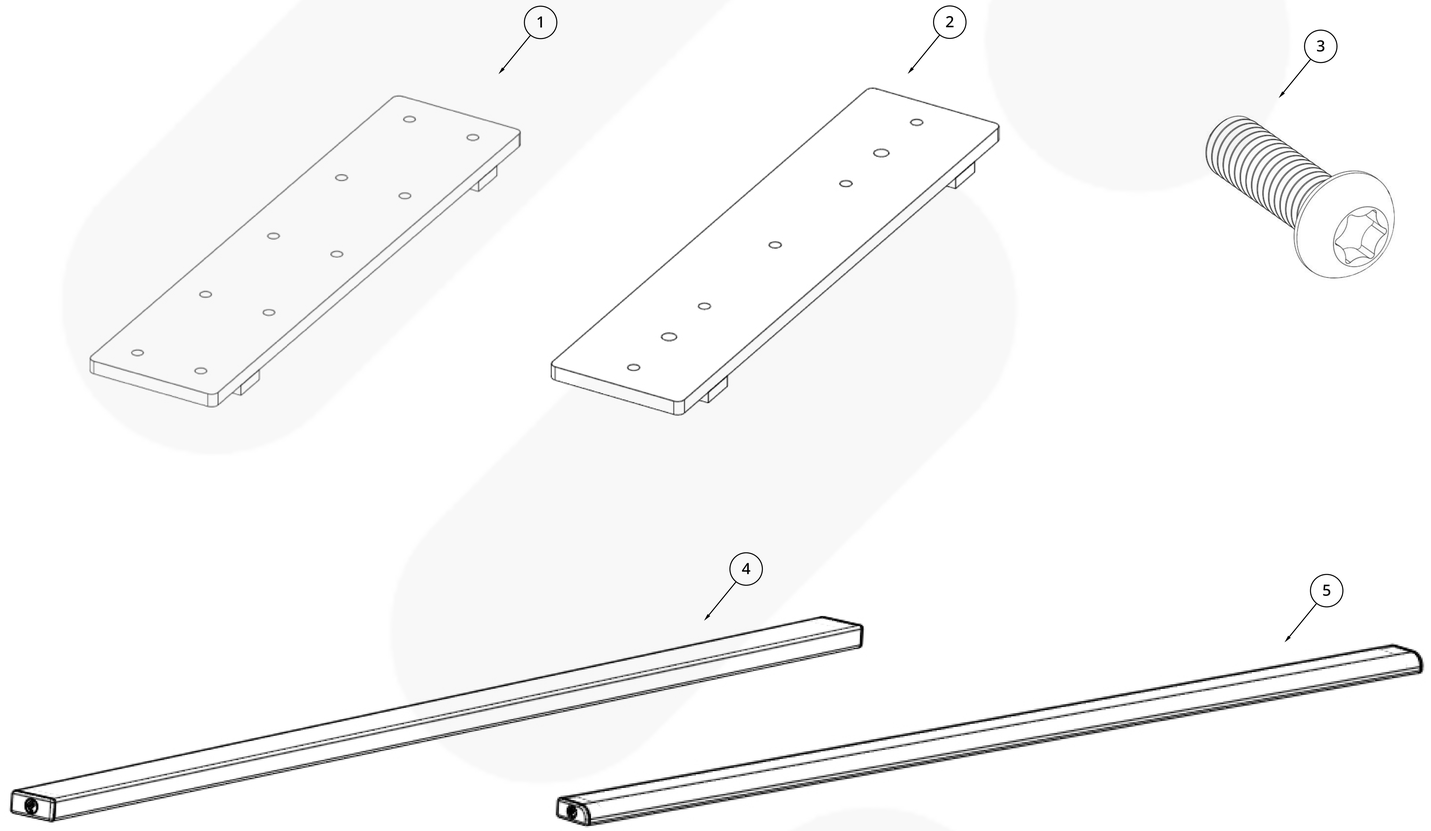

WARNING: This Assembly requires two or more people as lifting is involved. Please ensure bolts and nuts are only finger - tightened throughout assembly for flexibility in lining up components. Bolt and nuts should be securely tightened in place when instructed to do so. Please check all components are included before proceeding with the assembly.

1.

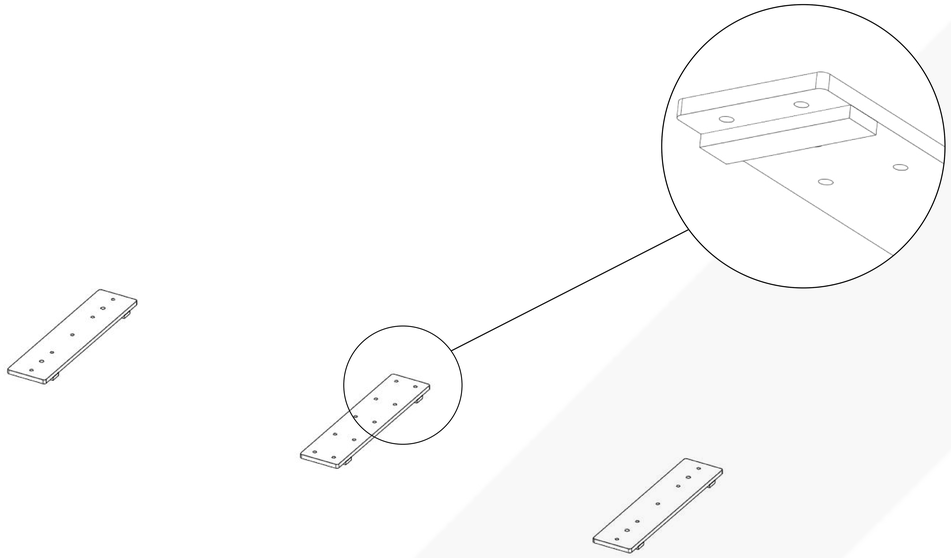

Position the middle plate (**1**) in between Avoca plate parts (**2**) as shown above, making sure all of the flat bar sides are positioned towards the ground.

2.

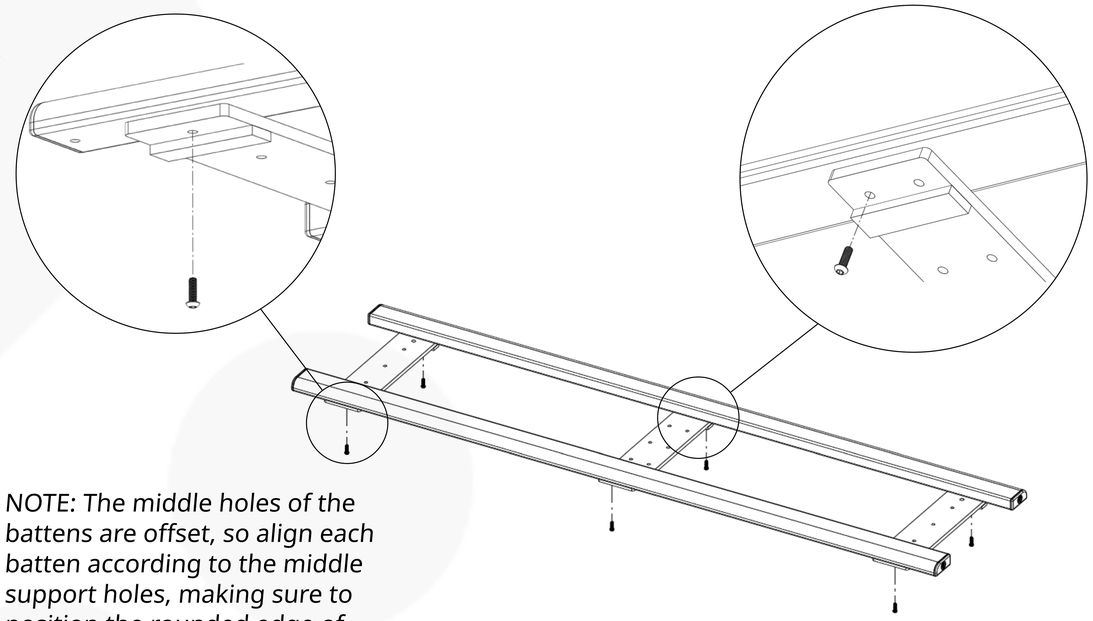

NOTE: The middle holes of the battens are offset, so align each batten according to the middle support holes, making sure to position the rounded edge of each batten as shown above.

Align the pre-cutholes of the round-end battens (**5**), with the holes on each end section of the supports, the secure the battens using M6 x 20mm screws (**2**).

3.

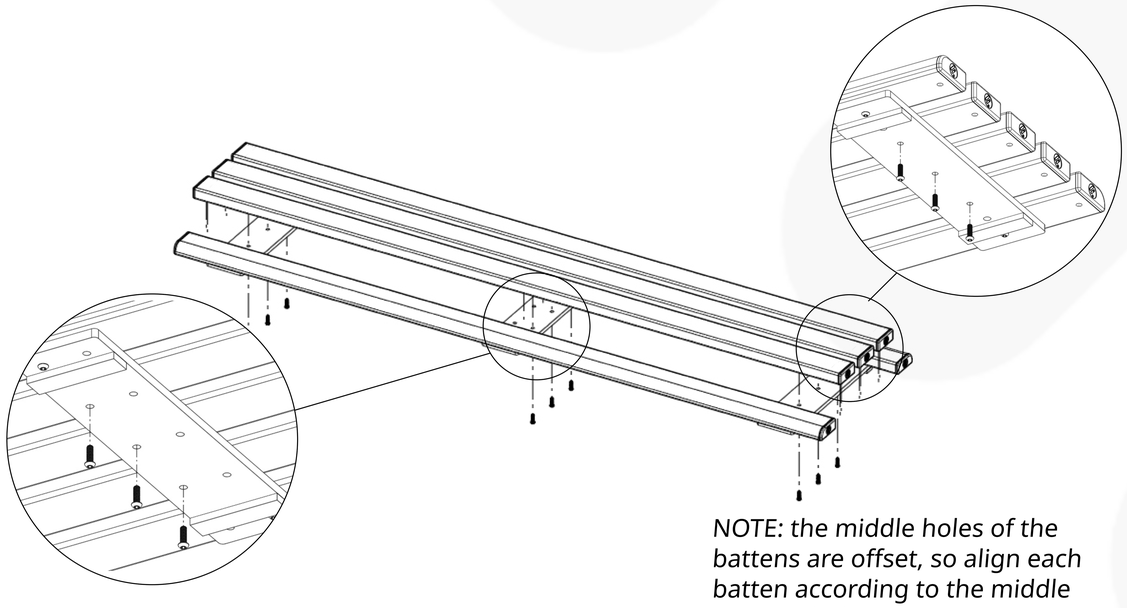

NOTE: the middle holes of the battens are offset, so align each batten according to the middle support holes.

Secure the rest of the square battens (**4**)using the middle support holes as a guide, fastening with M6 x 20mm screws (**2**).

4.

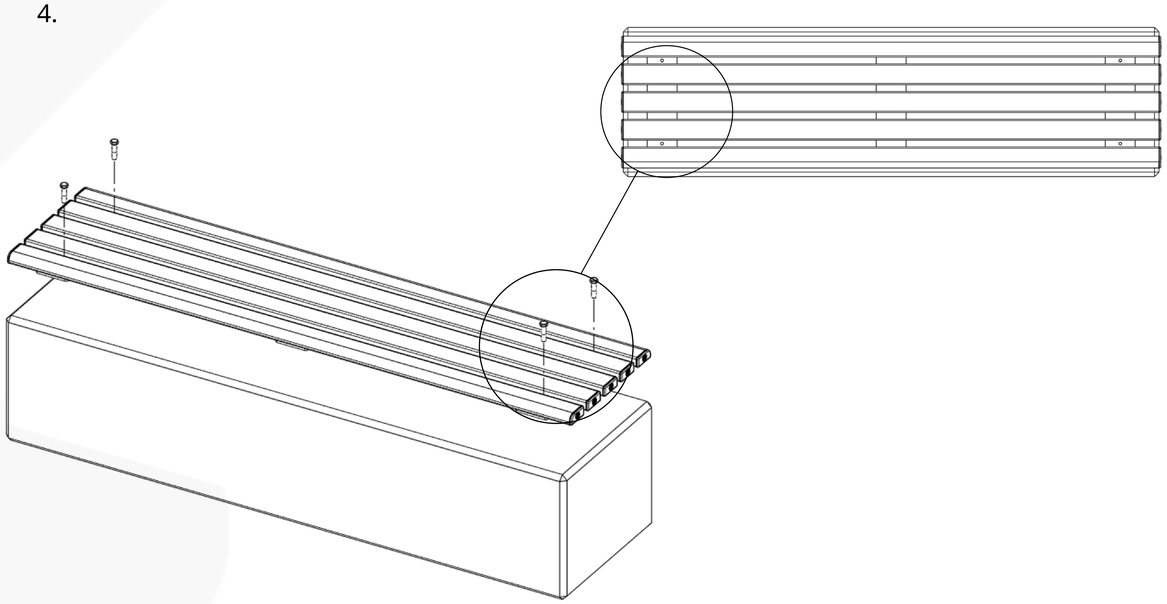

Tighten all screws completely before installing the seat. Bolt down seat using M8 x50mm RamsetDynaBolt.